固定翼专用3 轴陀螺仪使用说明

3 AXIS GYRO User Manual

TL-3AXIS-A 固定翼专业 3 轴陀螺仪适用于固定翼模型飞机增加稳定性，使得新手能够快速体验到驾驭航模的乐趣。

TL-3AXIS-A Plane gyro is designed to improve plane stability when fly, enable fresh model lovers learn and fell model flying joy quickly.

功能特点：

- 专为固定翼模型飞机设计，三轴陀螺增加飞行稳定性。
- 支持普通固定翼；三角翼；V 型尾翼 3 种机型。
- 改善算法使得飞行稳定与控制灵活得以实现。
- 可遥控关断 3 轴陀螺增稳系统，方便熟手全手动操作飞机。
- 体积小，重量轻。

Function Feature:

Specially designed for RC planes, 3AXIS gyro improves fly stability

Support common plane; delta wing; V tail 3 kinds RC models

Improve stability & flexibility

Remote control can shut down 3AXIS gyro system, convenient for skillful players to operate planes manually

技术参数：

- 电源电压：4-6v　直接使用电调的 BEC 供电。

- 输出信号：普通模拟舵机信号输出。
- 外形尺寸：
- 重量：

Technical Parameters:

Power voltage: 4-6V BEC of ESC supply the power directly.

Size:

Weight:

注意事项:

Attention Items:

- 安装 3 轴陀螺仪之前需要先确认您的飞机已经正确安装。

  Assemble your planes completely before assemble the 3AXIS gyro.
- 关闭遥控器上的 V 尾混控功能及三角翼混控功能。使遥控器工作于普通的固定翼模式

  Shut down V tail & delta wing multi control function of radio, make the radio work for common planes.

安装与调试:

Assemble & Adjustment :

- 安装位置：使用双面胶将 3 轴陀螺仪安装于飞机的重心位置附近，安装时使 3 三轴陀螺仪长轴方向顺着飞机飞行方向，并且保持 3 轴陀螺仪水平面与飞机机身平面水平。不正确的安装将影响 3 轴陀螺的性能，甚至不能正确工作。

  Install Location : Use double-sided tape to place the gyro on the gravity of the plane , long axis heads for the plane flying direction , ensure gyro and model body are the same horizontal plane. Incorrect installment will effect gyro function , even can't work .

三轴陀螺的出线方向和机头方向一致

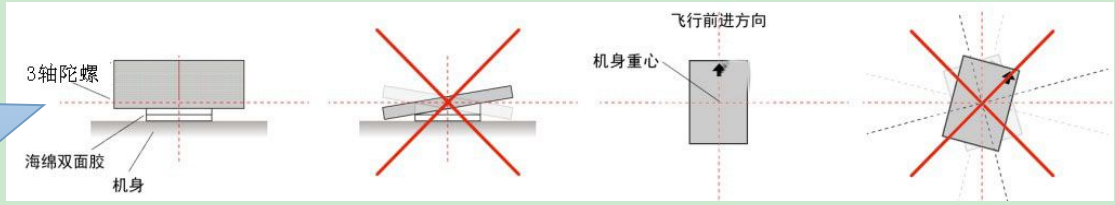

- 连接：安装固定完成后，将接收机的 副翼，升降舵，方向舵通道信号与 3 轴陀螺仪的 副翼输入（AIL-IN） ;升降舵输入（ELE-IN）;方向舵输入（RUD-IN）连接。这 3 个信号线必须连接，否则三轴陀螺不能正常工作。

  将接收机的感度通道（Gain）或您自选的辅助通道与 3 轴陀螺仪的 AUX-IN 连接。

  将你的飞机根据飞机类型相应的将各个舵面的舵机与 3 轴陀螺仪的信号输出对应连接，如图：

  Connection : After fixed the gyro , connect receiver aileron to gyro (AIL-IN); connect receiver elevator to gyro (ELE_IN); receiver rudder to gyro (RUD-IN). These 3 wires must be connected, otherwise, gyro can't work.

  Connect receiver Gain or the additional channel you choose with AUX-IN of the gyro.

  Connect planes to the gyro according to below pictures show:

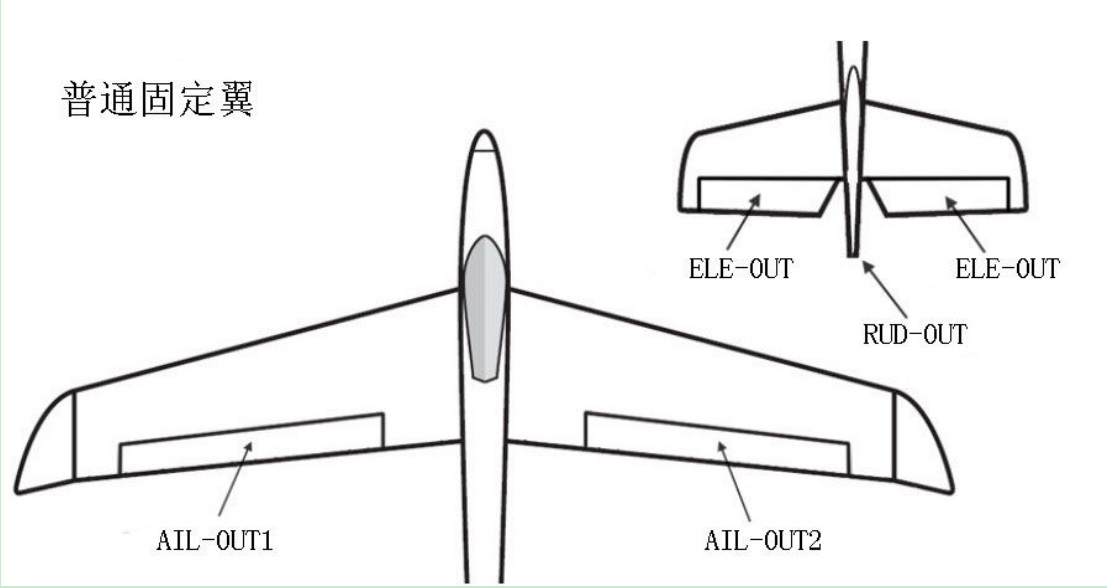
普通固定翼
ELE-OUT
ELE-OUT
RUD-OUT
AIL-OUT1
AIL-OUT2

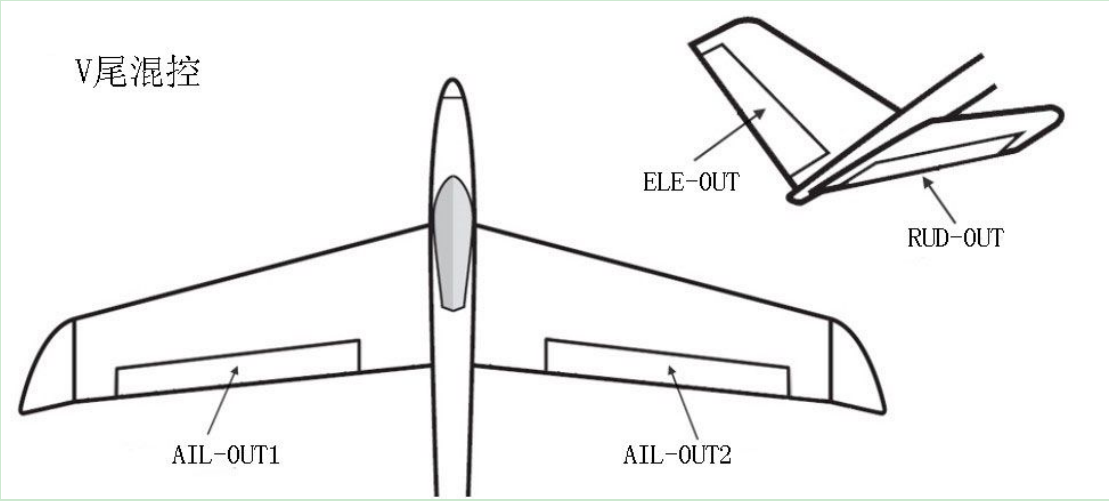
V尾混控
ELE-OUT
RUD-OUT
AIL-OUT1
AIL-OUT2

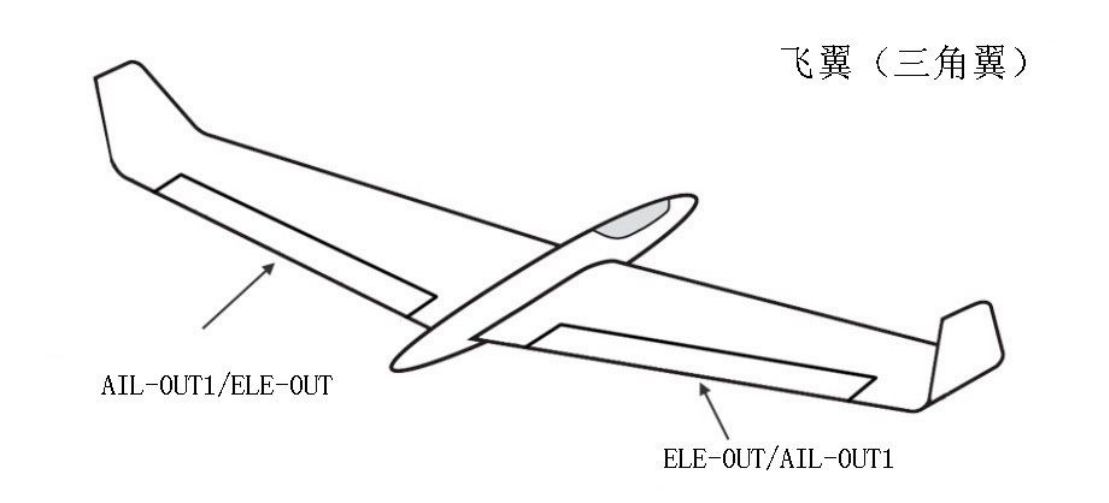

- 修正方向验证：
  Modified direction verification:

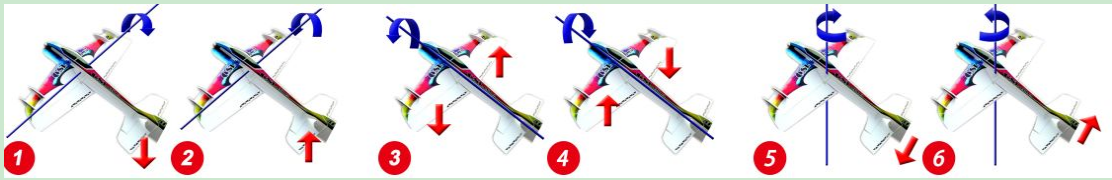

1) 围绕俯仰轴将机头抬起，升降舵应该自动向下做出修正；
   Lift plane head around pitch axis lift plane head, elevator should modify down automatically
2) 围绕俯仰轴将机头降低，升降舵应该自动向上做出修正；
   Reduce plane head around pitch axis, elevator should modify up automatically.
3) 围绕横滚轴将机身向左旋转，左边副翼应该自动向下做出修正，右边则向上做出修正；
   Revolve plane body around roll axis, the left aileron should modify down automatically, the right aileron should modify up automatically.
4) 围绕横滚轴将机身向右旋转，左边副翼应该自动向上做出修正，右边则向下做出修正
   Revolve plane body around roll axis, the left aileron should modify up automatically, the right aileron should modify down automatically.
5) 围绕自旋轴将机头向右旋转，方向舵应该自动向左做出修正。
   Revolve plane head right around spin axis, rudder should modify left automatically.
6) 围绕自旋轴将机头向左旋转，方向舵应该自动向右做出修正。
   Revolve plane head left around spin axis, rudder should modify right automatically.

- 感度设置：3 轴陀螺设置了 3 个方向的感度设置电位器，YAW 感度调节（方向舵）；PITCH 感度调节（升降舵）；ROLL 感度调节（副翼）。逆时针旋转感度减小，顺时针旋转感度增大。针对不同的飞机所需要的感度也有很大的差别。初次试飞时需要使用较小的感度来试飞，如增稳效果不明显，则逐步加大相应方向的感度，如发现某个方向出现抖动现

象，则这个方向的感度设置过大，需要降低一些。直至将 3 个方向的感度都设置的合适。
Sensitivity settings: 3 AXIS gyro has 3 directions sensitivity regulation resistance. YAW sensitivity adjustment (Rudder); Pitch sensitivity adjustment (Elevator); Roll sensitivity adjustment (Aileron). Counterclockwise rotation makes sensitivity small, clockwise rotation makes sensitivity big. Different kinds of RC models have different sensitivity demand. Small sensitivity is better for trial fight . If head lock is not good, please increase sensitivity , if find plane shake at one direction, it means sensitivity on this side too strong ,need to reduce. Adjust in this way till all directions are appropriate.

- 遥控关断/打开 3 轴陀螺仪：3 轴陀螺仪的 AUX-IN 输入通道可以接入接收机的 Gain 或 AUX 辅助控制通道信号，通过遥控器上的 2 档开关来遥控打开和关断 3 轴陀螺仪。当这个 AUX-IN 输入不连接接收机信号时，为打开 3 轴陀螺仪功能状态。

Open/shut 3Axis ： AUX-IN input channel of 3Axis can access receiver’s Gain or AUX auxiliary control signal channel, through radio band 2 turn on and off 3Axis. 3Axis is on open state when AUX-IN not access receiver signals.

每次飞行前，请按照以下步骤进行标准的开机操作：
Before your each flight, please follow below stander starting operation.
第 1 步 打开发射机电源；将副翼；升降舵；方向舵摇杆的微调置于中间位置。
Step1: Turn on transmitter power，putting aileron; elevator and rudder rocker in the middle.
第 2 步 将飞机正面朝上放在相对水平的地面上，切勿将飞机拿在手上上电！无论飞控是水平还是垂直安装，开机时飞机都要处于正面朝上并且水平的姿态，在启动时将对陀螺仪进行相关校准，如果启动时飞机处于大角度倾斜、垂直或翻转的状态，将会导致校准错误或失败。
Step2: Right side facing up to put airplanes on a relatively level surface, forbidden turn on within hand. No matter installing in a horizontal or vertical, power on airplane should keep in a level surface and right side up. Gyro should be calibrated before starting. It may cause calibration fail when starting airplane in a severely tilt or vertically overturn status.

第 3 步 接通接收机和飞控电源，指示灯闪烁期间不要移动或晃动飞机，应该保持机身静止直至初始化完成。
Step3: Turn on the receiver and radio control power, do not remove or waggle airplane when indicator blinking and before initial over plane should keep still.

第 4 步 进入待机状态后，LED 的颜色指示了目前的工作状态和飞行模式，这时，别忘了拨动遥控器上的各个摇杆和模式开关，检查各舵面的反应是否正确和飞行模式切换是否正常后，再开始飞行。
Step4： When entering ready mode, LED color the right working status and flight mode please don’t forget to stir all rocker switches, checking each helms performance and transition flight mode whether normal, after that you can start a flight.

红色指示灯闪烁：初始化状态。
Red indicator blink: initial status.
红色指示灯常亮：3 轴陀螺遥控打开状态。
Red indicator on: 3Axis radio in turn on status.
红色指示灯熄灭：3 轴陀螺遥控关闭状态。
Red indicator off: 3Axis radio in turn off status.
绿色指示灯熄灭：普通固定翼机型。
Green indicator off: normal airplanes model.
绿色指示灯常亮：V 尾混控机型。
Green indicator on: V-tail multiple control model.
绿色指示灯闪烁：飞翼（三角翼）混控机型。
Green indicator blink: Wing (Triangular empennage) multiple control model.

副翼信号输入(AIL-IN);
Aileron signal input (AIL-IN);
升降舵信号输入(ELE-IN);

Elevator input (ELE-IN);
方向舵信号输入(RUD-IN);
Rudder signal input (RUD-IN);
辅助控制信号输入(AUX-IN);用于遥控关闭陀螺，以达到全手动控制飞行的目的。
Auxiliary control signal input (AUX-IN); used for radio turn off gyro， so that full- manual control flight.

副翼信号输出 1(AIL-OUT1);
Aileron signal output 1 (AIL-OUT1)；
升降舵信号输出(ELE-OUT);
Elevator signal output (ELE-OUT);
方向舵信号输出(RUD-OUT);
Rudder signal output (RUD-OUT);
副翼信号输出 2(AIL-OUT2);
Aileron signal output 2 (AIL-OUT2)；

SW1 副翼 1 陀螺信号输出方向;
SW1 first aileron gyro signal output direction
SW2 升降舵陀螺信号输出方向;
SW2 elevator gyro signal output direction
SW3 方向舵陀螺信号输出方向;
SW3 rudder gyro signal output direction
SW4 副翼 2 陀螺信号输出 2 方向;
SW4 second aileron gyro signal output 2 direction
SW5 三角翼混控功能开关;
SW5 Triangular empennage multiple function switch
SW6 V 型尾翼混控功能开关;
SW6 V-tail multiple function switch

YAW 感度调节; （方向舵）
YAW sensitive adjustment;（rudder）
PITCH 感度调节; （升降舵）
PITCH sensitive adjustment;（elevator）
ROLL 感度调节; （副翼）

- ROLL sensitive adjustment;（aileron）